SensorsONE
Measurement Instrumentation Products

LMK 458H

Probe with HART®-communication for Marine and Offshore

Ceramic Sensor

accuracy according to IEC 60770:
0.1 % FSO

Nominal pressure

from 0 ... 60 cmH_2O up to 0 ... 200 mH_2O

Output signals

2-wire: 4 ... 20 mA
others on request

Special characteristics

- shipping approvals acc. to:
  Lloyd´s Register (LR), Germanischer Lloyd (GL), Det Norske Veritas (DNV) China Classification Society (CCS)
- diameter 39.5 mm
- HART® communication (setting of offset, span and damping)
- high overpressure resistance
- high long-term stability

Optional versions

- IS-version zone 0
- diaphragm Al_2O_3 99.9 %
- different housing materials (stainless steel, CuNiFe)
- screw-in and flange version
- accessories e. g. assembling and probe flange, mounting clamp

The hydrostatic probe LMK 458H has been developed for measuring level in service and storage tanks and is as a consequence certificated for shipbuilding and offshore applications.

A permissible operating temperature of up to 85°C and the possibility to use the device in intrinsic safe areas enable to measure the pressure of various fluids under extreme conditions. The basis for the LMK 458H is a capacitive ceramic sensor element, which offers a high overload resistance and medium compatibility.

Preferred areas of use are

Water
Drinking water abstraction
Desalinization plant

Shipbuilding / Offshore
Ballast tanks
Draught monitoring
Level measurement in ballast and storage tanks

Pressure ranges								
Nominal pressure [1] [bar]	0.06	0.16	0.4	1	2	5	10	20
Level [mH_2O]	0.6	1.6	4	10	20	50	100	200
Overpressure [bar]	2	4	6	8	15	25	35	45

[1] On customer request we adjust the devices by software on the required pressure ranges, within the turn-down possibility (starting at 0.02 bar).

Output signal / Supply				
Standard	2-wire: 4 ... 20 mA / V_S = 12 ... 36 V_{DC} with HART® communication $V_{S\ rated}$ = 24 V_{DC}			
Option IS-version	2-wire: 4 ... 20 mA / V_S = 14 ... 28 V_{DC} with HART® communication $V_{S\ rated}$ = 24 V_{DC}			
Performance				
Accuracy [2]	P_N ≥ 160 mbar	TD ≤ 1:5 TD > 1:5	≤ ± 0.2 % FSO ≤ ± [0.2 + 0.03 x TD] % FSO	TD_{max} = 1:10
	P_N < 160 mbar		≤ ± [0.2 + 0.1 x TD] % FSO	TD_{max} = 1:3
	P_N ≥ 1 bar	TD ≤ 1:5 TD > 1:5	≤ ± 0.1 % FSO ≤ ± [0.1 + 0.02 x TD] % FSO	TD_{max} = 1: 10
Permissible load	R_{max} = [(V_S - $V_{S\ min}$) / 0.02 A] Ω load at HART®-communication: R_{min} = 250 Ω			
Long term stability	≤ ± (0.1 x turn-down) FSO / year at reference conditions			
Influence effects	supply: 0.05 % FSO / 10 V permissible load: 0.05 % FSO / kΩ			
Turn-on time	850 msec			
Mean response time	140 msec without consideration of electronic damping mean measuring rate 7/sec			
Max. response time	380 msec			
Adjustability	configuration of following parameters possible (interface / software necessary [3]): - electronic damping: 0 ... 100 sec - offset: 0 ... 80 % FSO - turn down of span: max. 1:10			

[2] accuracy according to IEC 60770 – limit point adjustment (non-linearity, hysteresis, repeatability)
[3] software, interface, and cable have to be ordered separately (software appropriate for Windows ® 95, 98, 2000, NT Version 4.0 or higher, and XP)

Thermal effects (Offset and Span) / Permissible temperatures	
Tolerance band	≤ ± [0.2 x turn-down] % FSO
TC, average	≤ ± [0.02 x turn-down] % FSO / 10 K
in compensated range	-20 … 80 °C
Permissible temperatures	medium: -25 … 85 °C electronics / environment: -25 … 85 °C storage: -25 … 85 °C
Electrical protection [4]	
Short-circuit protection	permanent
Reverse polarity protection	no damage, but also no function
Electromagnetic compatibility	emission and immunity according to - EN 61326 - Germanischer Lloyd (GL) - Det Norske Veritas (DNV)

[4] additional external overvoltage protection unit in terminal box KL 1 or KL 2 with atmospheric pressure reference available

Mechanical stability	
Vibration	4 g (according to GL: curve 2 / according to DNV: Class B / basis: DIN EN 60068-2-6)
Electrical connection	
Cable	shielded cable with integrated air tube for atmospheric reference (for nominal pressure ranges absolute, the air tube is closed)
Materials (media wetted)	
Housing	standard: stainless steel 1.4404 (316L) option: CuNi10Fe1Mn (resistant against sea water) others on request
Cable sheath	TPE -U (flame-resistant, halogen free, increased resistance against oil and gasoline, resistant against salt, sea water, heavy oil)
Seals	FKM; FFKM; EPDM others on request
Diaphragm	standard: ceramics Al_2O_3 96 % option: ceramics Al_2O_3 99.9 %
Nose cone	POM
Miscellaneous	
Cable protection	stainless steel pipe for probe in stainless steel: available as compact product (standard: stainless steel pipe with a total length up to 2 m possible; other lengths on request)
Ingress protection	IP 68
Current consumption	max. 21 mA
Weight	min. 650 g (without cable)
CE-conformity	EMC Directive: 2004/108/EC
Category of the environment	
Lloyd´s Register (LR)	EMV1, EMV2, EMV3, EMV4 number of certificate: 13/20056
Germanischer Lloyd (GL)	D, EMC 1 number of certificate: 19 777 - 11 HH
Det Norske Veritas (DNV)	temperature: D humidity: B vibration: B electromagnetic compatibility: B number of certificate: A-12144

IS-protection	
Approval DX15A-LMK 458H	IBExU 10 ATEX 1186 X zone 0 [5]: II 1G Ex ia IIB T4 zone 20: II 1D Ex iaD 20 T85°C
Safety technical maximum values	U_i = 28 V, I_i = 93 mA, P_i = 660 mW, C_i = 105 nF; L_i = 5 µH; the supply connections have an inner capacity of max. 140 nF opposite the enclosure
Permissible temperatures for environment	in zone 0: -20 ... 60 °C with p_{atm} 0.8 bar up to 1.1 bar zone 1 and higher: -25 ... 70 °C
Connecting cables (by factory)	cable capacity: signal line/shield as well as signal line/signal line: 160 pF/m cable inductance: signal line/shield as well as signal line/signal line: 1 µH/m

[5] for optional stainless steel pipe the following designation is valid: "II 1G Ex ia IIC T4" (zone 0)

Wiring diagrams

2-wire-system (current) HART®

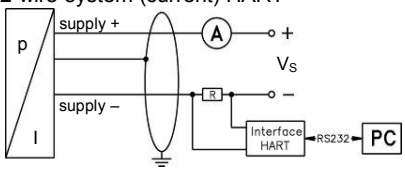

Pin configuration

Electrical connection	cable colours (DIN 47100)
Supply V_S+ Supply V_S–	wh (white) bn (brown)
Shield	ye/gn (yellow / green)

Dimensions (in mm)

probe version

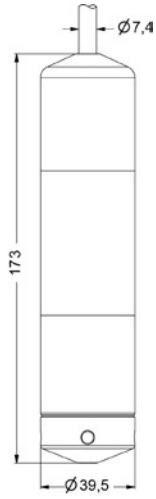

stainless steel / CuNiFe

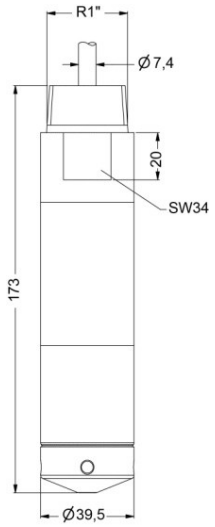

prepared for mounting
with stainless steel pipe

HART® is a registered trade mark of HART Communication Foundation;
Windows® is a registered trade mark of Microsoft Corporation

Dimensions (in mm)

screw-in version

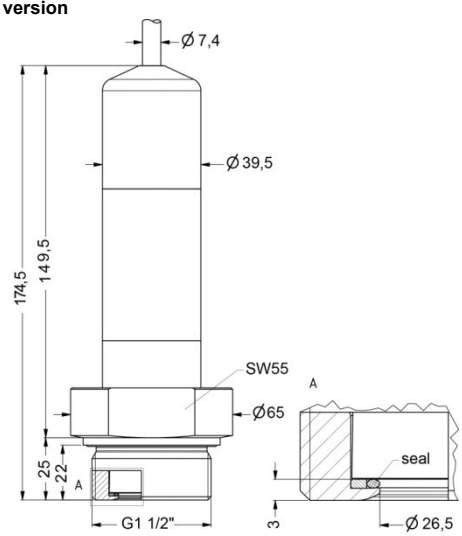

stainless steel / CuNiFe

flange version

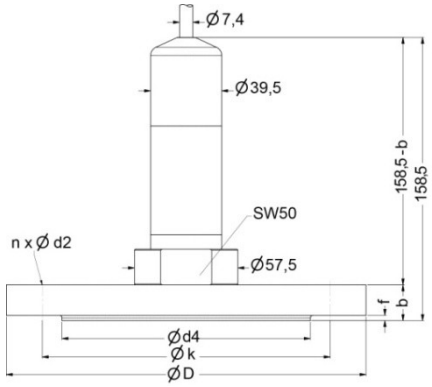

stainless steel / CuNiFe

© 2014 - The specifications given in this document represent the state of engineering at the time of publishing. We reserve the right to make modifications to the specifications and materials.

Transmitter flange for flange version		
Technical data		
Suitable for	LMK 382, LMK 382H, LMK 458, LMK 458H	
Flange material	stainless steel 1.4404 (316L)	
Hole pattern	according to DIN 2507	
Version	**Size (in mm)**	**Weight**
DN25 / PN40	D = 115, k = 85, d4 = 68, b = 18, f = 2, n = 4, d2 = 14	1.2 kg
DN50 / PN40	D = 165, k = 125, d4 = 102, b = 20, f = 3, n = 4, d2 = 18	2.6 kg
DN80 / PN16	D = 200, k = 160, d4 = 138, b = 20, f = 3, n = 8, d2 = 18	4.1 kg
Ordering type		**Ordering code**
Transmitter flange DN25 / PN40		ZSF2540
Transmitter flange DN50 / PN40		ZSF5040
Transmitter flange DN80 / PN16		ZSF8016

Mounting flange with cable gland		
Technical data		
Suitable for	all probes	
Flange material	stainless steel 1.4404 (316L)	
Material of cable gland	standard: brass, nickel plated on request: stainless steel 1.4305; plastic	
Seal insert	material: TPE (ingress protection IP 68)	
Hole pattern	according to DIN 2507	
Version	**Size (in mm)**	**Weight**
DN25 / PN40	D = 115, k = 85, b = 18, n = 4, d= 14	1.4 kg
DN50 / PN40	D = 165, k = 125, b = 20, n = 4, d= 18	3.2 kg
DN80 / PN16	D = 200, k = 160, b = 20, n = 8, d= 18	4.8 kg
Ordering type		**Ordering code**
DN25 / PN40 with cable gland brass, nickel plated		ZMF2540
DN50 / PN40 with cable gland brass, nickel plated		ZMF5040
DN80 / PN16 with cable gland brass, nickel plated		ZMF8016

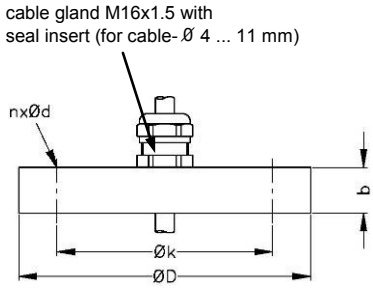

Ordering code LMK 458H

LMK 458H □□□-□□□□-□-□-□-□-□-□-□-□□□-□□□

Pressure			
in bar, gauge		76E	
in bar, sealed gauge [1]		76G	consult
in bar, absolute [1]		76H	
in mH_2O		76F	
Input	**[mH_2O]**	**[bar]**	
0.60	0.06	0600	
1.60	0.16	1600	
4.00	0.40	4000	
10	1.0	1001	
20	2.0	2001	
50	5.0	5001	
100	10	1002	
200	20	2002	
customer		9999	consult
Housing			
Stainless steel 1.4404 (316L)		1	
Copper-Nickel-alloy (CuNi10Fe1Mn)		K	
customer		9	consult
Design			
Submersible transmitter [2]		1	
Flange transmitter [2]		3	
Screw-in transmitter [2]		5	
Diaphragm			
Ceramics Al_2O_3 96%		2	
Ceramics Al_2O_3 99.9%		C	
customer		9	consult
Output			
HART®-communication 4 … 20 mA / 2-wire		H	
HART®-communication Intrinsic safety 4 … 20 mA / 2-wire		I	
customer		9	consult
Seals			
FKM		1	
EPDM		3	
FFKM		7	
customer		9	consult
Electrical connection			
TPE-U-cable [3]		4	
customer		9	
Accuracy			
0.1 % [5]		1	
customer		9	consult
Cable length			
in m		999	
Special version			
standard		000	
prepared for mounting with st. steel pipe [2, 4]		502	
customer		999	consult

[1] nominal pressure ranges sealed gauge and absolute from 1 bar
[2] mounting accessories are not part of supply and have to be ordered separately
[3] shielded cable with integrated air tube for atmospheric reference
[4] stainless steel pipe is not part of the supply
[5] only possible for $P_N \geq 1$ bar

HART® is a registered trade mark of HART Communication Foundation

This dokument contains product specification; properties are not guaranteed. Detailed information about options are defined in the datasheet. Subject to change without notice.